www.OldColemanParts.com

PARTS LIST

631, 632, 633

PORTABLE COOLER

COLEMAN COOLERS

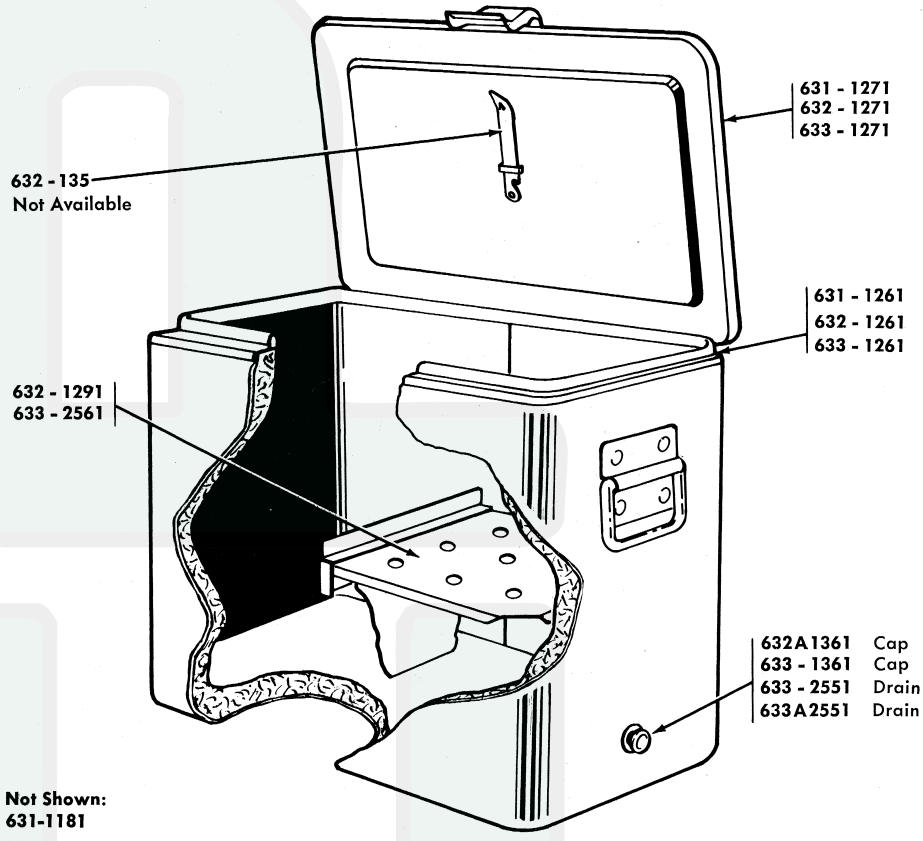

MODEL 632 SHOWN
(Discontinued)

MODEL	FINISH	CAPACITY (Cubic Inches)	DIMENSIONS	
			Inside HEIGHT-WIDTH-DEPTH	Outside HEIGHT-WIDTH-DEPTH
631	Ice-Green Hammerloid	1300	11⅜" x 15" x 7⅝"	12½" x 16½" x 9"
632	Ice-Green Hammerloid	1850	12⅜" x 16⅝" x 9"	13½" x 18" x 10½"
633	Ice-Green Hammerloid	3420	14½" x 20½" x 11½"	16" x 22" x 13"

COOLERS

PART NO.	DESCRIPTION
* 631 - 1181	Bail [631*]
* 631 - 1261	Gasket *(Lid)* [631*]
* 631 - 1271	Lid Ass'y [631*]
* 632 - 1261	Gasket *(Lid)* [632*]
* 632 - 1271	Lid Ass'y [632*]
* 632 - 1291	Tray [632*]
632 - 135	Opener *(Can and Bottle)*— Not Available
632A1361	Cap *(Drain, Plastic, Red)*

PART NO.	DESCRIPTION
* 633 - 1261	Gasket *(Lid)* [633*]
* 633 - 1271	Lid Ass'y [633*]
* 633 - 1361	Cap Ass'y [632, 633*]
* 633 - 2551	Drain Ass'y *(1 Hole—Thread 7/16—40 Tapered)* [632, 633*]
* 633 - 2561	Tray [633*]
*633A2551	Drain Ass'y *(2 Hole—Thread ⅛—27NPT)* [632, 633*]

*Parts used on these models only.

www.OldColemanParts.com