www.OldColemanParts.com

PARTS LIST

200, 200A

INSTANT LIGHT GASOLINE
SINGLE MANTLE

COLEMAN LANTERNS

LANTERNS

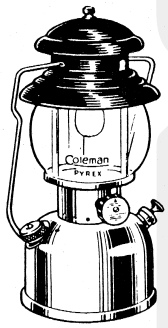

Model 200, 200A

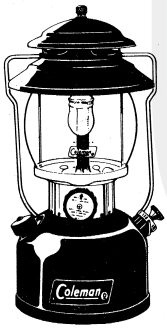

New Model 200A

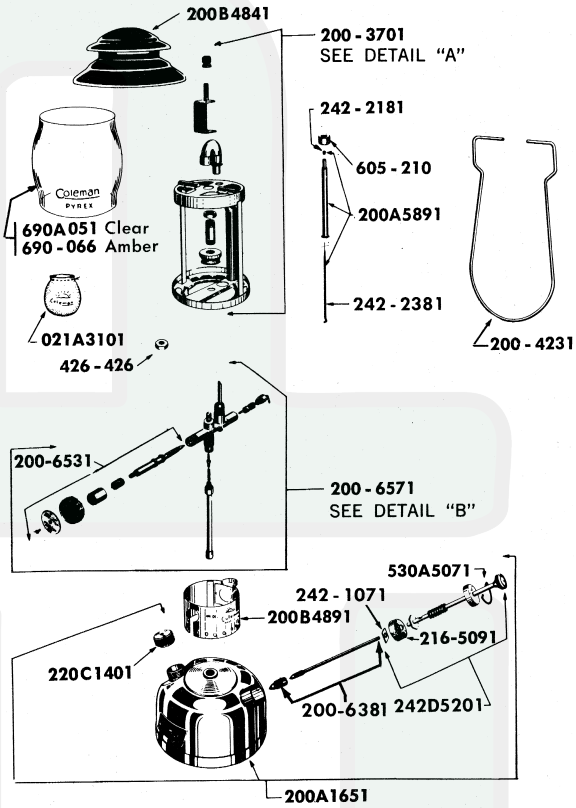

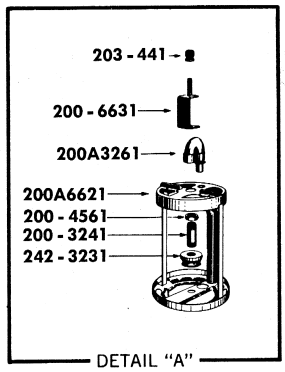

DETAIL "A"
200 - 3701

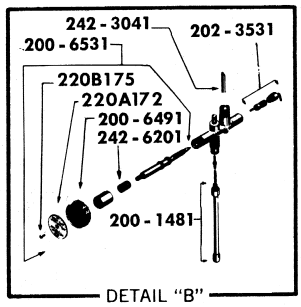

DETAIL "B"
200 - 6571

Parts Not Shown:
118B1361 Gasket

② Quantity of Parts Used in Assembly

MODEL 200A SHOWN

MODEL	FINISH		LANTERN HEIGHT	FUEL CAPACITY
	Fount	Ventilator (Porcelain		
200	Nickel	Red (5½")		
200A	Red	Red (5½")	11⅝"	1⅝ Pints

PART NO.	DESCRIPTION	USED ON
8B147	Lacquer, Red	
021A3101	021A Mantle	
118B1361	Filler Cap Gasket (for Cap with Disc)	
200 - 1481	Tube Assembly (Fuel and Air)	
200 - 3241	Burner Tube	
200 - 3701	Frame and Burner Complete	
200 - 4231	Bail	
200 - 4561	Lock Nut (½" — 32 Hex, Brass)	
200 - 6381	Check Valve and Stem	
200 - 6491	Valve Wheel	
200 - 6531	Valve Stem Assembly	
200 - 6571	Fuel Valve Complete (Less Generator)	
200 - 6631	Ventilator Bracket	
200A1651	Fount Complete	
200A3261	"U" Tube and Venturi	
200A6621	Burner Frame Assembly	
200B4841	Ventilator	
200B4891	Globe Base Rest	
200B5891	T66DL Generator	

PART NO.	DESCRIPTION	USED ON
202 - 3531	Tip Cleaner Stem	
203 - 441	Ventilator Ball Nut	
216 - 5091	Pump Cup	
220A172	Direction Disc	
220B175	Self-Tapping Screw (#4 — 40 x 5/16")	
220C1401	Filler Cap Complete	
242 - 1071	Push On Nut	
242 - 2181	Gas Tip, Marked "6"	
242 - 2381	Needle Assembly for Generator	
242 - 3041	Eccentric Block	
242 - 3231	Burner Cap and Screen	
242 - 6201	Valve Stem Packing	
242D5201	Pump Plunger Assembly	
426 - 426	Palnut (¼" — 20)	
530A5071	Pump Cap Clip	200A
605 - 210	Jamb Nut	
690 - 066	550A Amber Pyrex Globe — Accessory	
690A051	550 Clear Pyrex Globe	

www.OldColemanParts.com