www.OldColemanParts.com

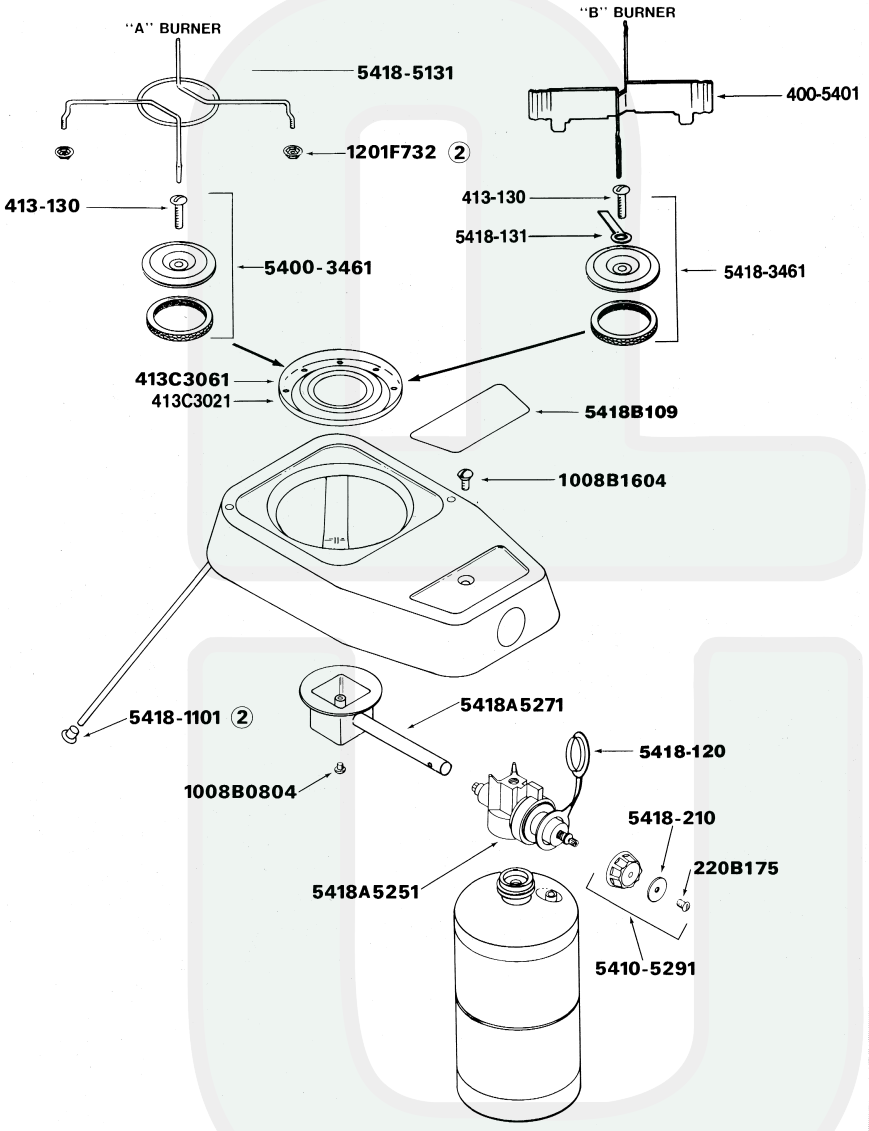

MODEL 5418A700, 5418B700

PARTS LIST

5418A700
5418B700

PROPANE CAMP STOVE

COLEMAN STOVES

Model 5418A700

STOVES

MODEL NO.	FINISH	HEIGHT	WIDTH	LENGTH
5418A700 5418B700	Fount Green	(Folded) 3"	(Folded) 6-5/8"	(Folded) 11-3/8"

PART NO.	DESCRIPTION	USED ON
8B242	Lacquer, Fount Green	
220B175	Screw, Valve Knob	
400-5401	Grate	5418B
413-130	Screw, Burner	
413C3021	Burner Bowl	5418B
413C3061	Burner Bowl	5418A
1008B0804	Screw, Burner Body	
1008B1604	Screw, Valve	
1201F732	Pal Nut	5418A
5103-164	Propane Fuel	
5400-3461	Cap & Fillers	5418A
5410-5291	Valve Knob	
5418-1101	Rubber Foot	
5418-120	Protective Cap	
5418-131	Grate Tab	5418B
5418-210	Disc	
5418-3461	Cap & Fillers	5418B
5418-5131	Grate	5418A
5418A5251	Regulator Valve	
5418A5271	Burner Body	

www.OldColemanParts.com